RB

Колено трубы 90°

Обновлено: 04.28.24

Характеристики

Модель	Колено трубы 90°
Норма	DIN 2391-C
Материал	Сталь ST 37.4 NBK (1.0255)
Защита поверхности	Фосфатирование и смазка маслом

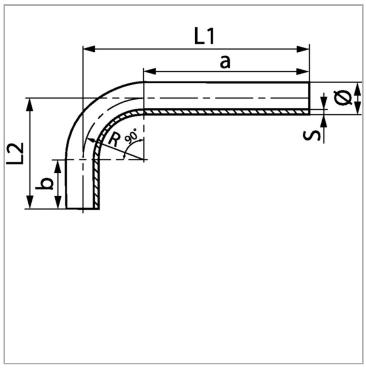

Описание

Бесшовные трубные колена 90° для минимальных потерь интенсивности потока.

Артикул

Наименование	Наружный Ø трубы	Внутренний Ø nom.	b	Радиус изгиба R	S	a	L1	L2
RB06-1.5	6,0	3,0	48,0	12	1,50	68,0	80,0	60,0
RB08-1.5	8,0	5,0	44,0	16	1,50	84,0	100,0	60,0
RB10-2	10,0	6,0	50,0	20	2,00	210,0	230,0	70,0
RB12-2	12,0	8,0	46,0	24	2,00	206,0	230,0	70,0
RB14-1.5	14,0	11,0	42,0	28	1,50	202,0	230,0	70,0
RB15-1.5	15,0	12,0	40,0	30	1,50	200,0	230,0	70,0
RB15-2	15,0	11,0	40,0	30	2,00	200,0	230,0	70,0
RB16-2	16,0	12,0	38,0	32	2,00	198,0	230,0	70,0
RB18-1.5	18,0	15,0	35,0	36	1,50	200,0	236,0	71,0
RB18-2	18,0	14,0	36,0	36	2,00	200,0	236,0	72,0
RB20-2	20,0	16,0	41,0	40	2,00	196,0	236,0	81,0
RB20-2.5	20,0	15,0	41,0	40	2,50	196,0	236,0	81,0
RB20-3	20,0	14,0	41,0	40	3,00	196,0	236,0	81,0
RB22-1.5	22,0	19,0	34,0	44	1,50	194,0	238,0	78,0
RB22-2	22,0	18,0	34,0	44	2,00	194,0	238,0	78,0
RB22-2.5	22,0	17,0	34,0	44	2,50	194,0	238,0	78,0
RB22-3.5	22,0	15,0	34,0	44	3,50	194,0	238,0	78,0
RB25-2	25,0	21,0	44,0	50	2,00	194,0	244,0	94,0
RB25-2.5	25,0	20,0	44,0	50	2,50	194,0	244,0	94,0
RB25-3	25,0	19,0	44,0	50	3,00	194,0	244,0	94,0
RB25-4	25,0	17,0	44,0	50	4,00	194,0	244,0	94,0
RB28-1.5	28,0	25,0	42,0	56	1,50	192,0	248,0	98,0
RB28-2	28,0	24,0	42,0	56	2,00	192,0	248,0	98,0
RB28-3	28,0	22,0	42,0	56	3,00	192,0	248,0	98,0
RB30-2.5	30,0	25,0	50,0	60	2,50	190,0	250,0	110,0
RB30-3	30,0	24,0	50,0	60	3,00	190,0	250,0	110,0
RB30-4	30,0	22,0	50,0	60	4,00	190,0	250,0	110,0
RB35-2	35,0	31,0	55,0	70	2,00	190,0	260,0	125,0
RB35-3	35,0	29,0	55,0	70	3,00	190,0	260,0	125,0
RB38-2.5	38,0	33,0	64,0	76	2,50	189,0	265,0	140,0
RB38-3	38,0	32,0	64,0	76	3,00	189,0	265,0	140,0
RB38-4	38,0	30,0	64,0	76	4,00	189,0	265,0	140,0
RB38-5	38,0	28,0	64,0	76	5,00	189,0	265,0	140,0
RB42-2	42,0	38,0	81,0	84	2,00	196,0	280,0	165,0
RB42-3	42,0	36,0	81,0	84	3,00	196,0	280,0	165,0
RB50-6	50,0	38,0	235,0	75	6,00	235,0	310,0	310,0
RB65-8	65,0	49,0	190,0	130	8,00	190,0	320,0	320,0
RB80-10	80,0	60,0	180,0	150	10,00	180,0	330,0	330,0

Несмотря на тщательную проверку, мы не может исключить ошибки, поэтому
мы не берем на себя ответственность за содержащуюся информаци

© hansa-flex.com.ua